SUBMITTAL DATA SHEET

DuraMAC™ Booster Pumps

Residential | Light Commercial | Commercial

DuraMAC™ - Light Commercial & Irrigation

3 YEAR LIMITED WARRANTY

See Pumps & Accessories Price List for Limited Warranty details.

Not all boosting applications require complicated boosting systems. The DuraMAC™ Boosting system is simple, versatile, sophisticated, and reliable. Quite simply, it is the world's most versatile boosting system for commercial or irrigation use.

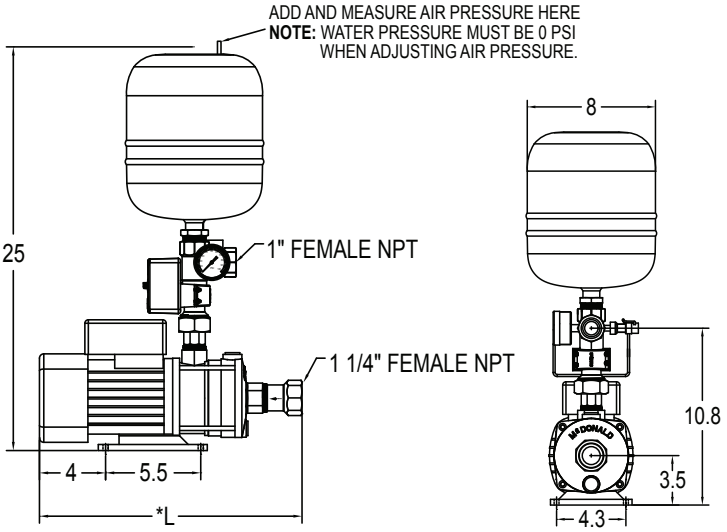

*See chart below

DuraMAC™ Performance (Additional Boost)

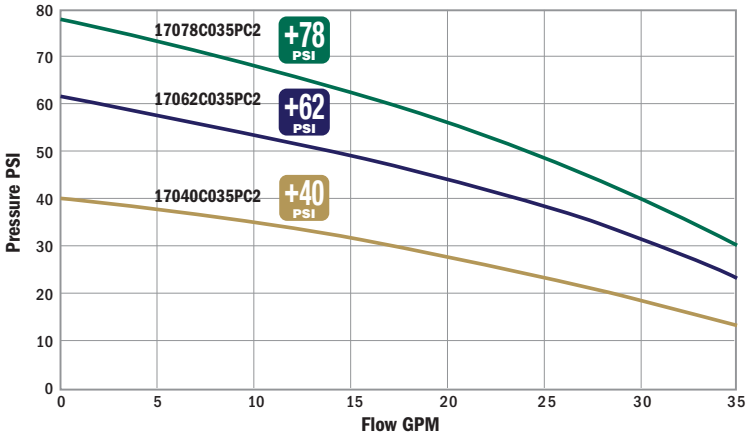

35 Gallon/Minute (GPM) Max

DuraMAC™ Model	Pump Boost	Amps	Length "L"	Voltage	Power	Pressure Reducing Valve recommended for installation with incoming pressure greater than:
17040C035PC2	40 PSI	5.0	15.43"	230 - 60 Hz	1 HP	40 PSI
17062C035PC2	62 PSI	6.3	16.49"	230 - 60 Hz	1 HP	18 PSI
17078C035PC2	78 PSI	6.8	17.55"	230 - 60 Hz	1 1/2 HP	2 PSI

Pressure tank required. See instruction manual for sizing information.
*Many plumbing codes do not recommend system pressure exceeding 80 PSI. Refer to local plumbing codes for maximum boosted pressure.

SUBMITTAL INFORMATION

- Water Pressure Boosting System for irrigation or light commercial use
- Easy set-up installation
- Digital control with three modes of operation
- Durable stainless steel and no-lead brass connections
- Two gallon pressure tank included
- TEFC single phase motor for quiet operation
- Electronics separated and sealed from waterway
- Pressure gauge included
- No-Lead brass check valve included
- Dry-Run protection

NO-LEAD: The weighted average of the wetted surface of this no-lead product contacted by consumable water contains less than one quarter of one percent (0.25%) lead.

EST. 1856 McDonald

A.Y. McDonald Mfg. Co.
P.O. Box 508
Dubuque, IA 52004-0508

Toll Free: 1-800-292-2737
Fax: 1-800-832-9296
Hours: 7:00 a.m. - 5:00 p.m., CST

sales@aymcdonald.com
www.aymcdonald.com

A.Y. McDonald considers the information on this assembly drawing correct when published. Item and option availability, including specifications, are subject to change without notice.

Submitted by:

SUBMITTAL DATA SHEET

DuraMAC™ Booster Pumps

Residential | Light Commercial | Commercial

DuraMAC™ - Light Commercial & Irrigation

3 YEAR LIMITED WARRANTY

See Pumps & Accessories Price List for Limited Warranty details.

Sizing Information

DuraMAC™ Booster Systems are designed to shut off when no flow is detected. Pump pressure boost should be added to current system pressure to determine total system pressure when boosted.

Example:
System pressure before boost = 30 PSI

30	+	_____	=	_____
Current Pressure		Total Pump Pressure		Total Pressure After Boost

*Not Recommended to Exceed 80 PSI

Models Available:	Boost
17040C035PC2	+40
17062C035PC2	+62
17078C035PC2	+78

30	+	40	=	70
Current Pressure		Total Pump Pressure		Total Pressure After Boost

Based on this example, the recommended model for this application is the 17040C035PC2.

For systems with fluctuating pressure, a pressure reducing valve is recommended to assure system pressure stays below 80 PSI.

Sizing Chart

Total static pressure **DuraMAC™** pump

Incoming Pressure (PSI)	17040C035PC2 +40 PSI	17062C035PC2 +62 PSI	17078C035PC2 +78 PSI
60		NOT RECOMMENDED	
55			
50	90		
45	85		
40	80		
35	75		
30	70		
25	65	87	
20	60	82	
15	55	77	93
10	50	72	88

Materials of Construction

Impellers	304 Stainless Steel
Pump Casing Inlet	301 Stainless Steel
Pump Casing Outlet	301 Stainless Steel
Pump Seal (stationary)	Silicon Carbide
Pump Seal (rotating)	Carbon / NBR
Diffuser	304 Stainless Steel
Suction Check Valve	No-Lead Brass
Pump Control Body	No-Lead Brass

Typical Installation

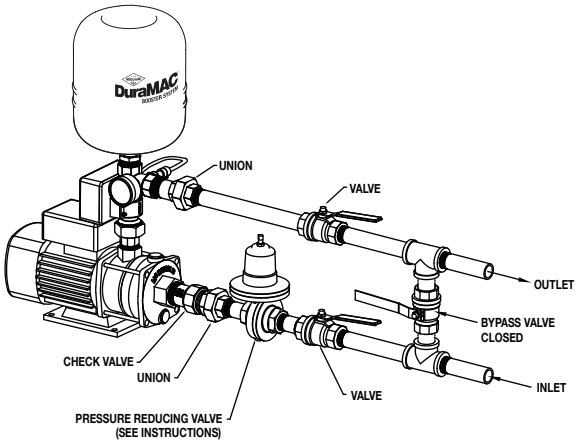

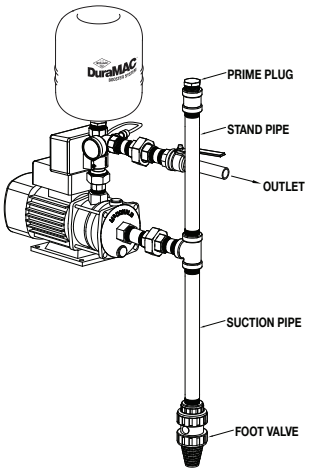

NO-LEAD: The weighted average of the wetted surface of this no-lead product contacted by consumable water contains less than one quarter of one percent (0.25%) lead.

EST. 1856 McDonald

A.Y. McDonald Mfg. Co.
P.O. Box 508
Dubuque, IA 52004-0508

Toll Free: 1-800-292-2737
Fax: 1-800-832-9296
Hours: 7:00 a.m. - 5:00 p.m., CST

sales@aymcdonald.com
www.aymcdonald.com

A.Y. McDonald considers the information on this assembly drawing correct when published. Item and option availability, including specifications, are subject to change without notice.

Submitted by: